TWN4 MultiTech 2 LEGIC M LF HF

(LEGIC SM-4200/4500 frontend)

Multi-frequency RFID module (LF/HF) with NFC support

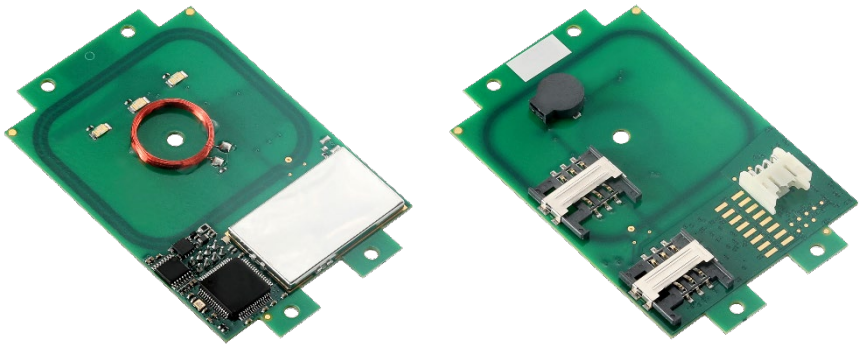

TWN4 MultiTech 2 LEGIC M LF HF
(exemplary illustrations)

The contactless RFID readers and modules of the ELATEC TWN4 MultiTech 2 LEGIC family are a direct enhancement of the TWN4 MultiTech LEGIC readers with the same form factors (PCB modules and desktop readers with housing). During the development of the TWN4 MultiTech 2 LEGIC family, special emphasis has been placed on optimizing the HF performance (13.56 MHz). Compared to the predecessor TWN4 MultiTech LEGIC, the read range could be increased by more than 50% for LEGIC transponders and even doubled for some HF transponders.

TWN4 MultiTech 2 LEGIC M LF HF key features include a powerful SDK for writing apps that are executed directly on the module, the possibility to upgrade the firmware in the field, and transparent data exchange with the RFID media. Additionally, the module can read more than 60 RFID technologies from low (LF) and high frequency (HF) bands, including NFC. This gives the option to select as many of the technologies required instead of being forced to select just a few ones.

Special features:

+ Possibility to read more than 60 RFID technologies
+ Two RFID frequencies (125 kHz/13.56 MHz) and NFC support in a compact form factor for easy integration
+ Optimized HF read performance
+ Powerful SDK for writing apps which are executed directly on the module
+ Firmware update in the field possible
+ On-board 18 kB flash storage, e.g. for storing user accessible non-volatile data
+ Supports transparent data exchange with RFID media
+ CCID and PC/SC 2.01
+ Support of segment initialization function (LEGIC SM-4500 frontend only)

TECHNICAL DATA

FREQUENCIES	125 kHz (LF) / 13.56 MHz (HF)
ANTENNAS	Integrated
DIMENSIONS (L X W X H)	Approx. 76.00 x 49.00 x 8.20 mm / 2.99 x 1.93 x 0.32 inch
POWER	USB: 4.3 V - 5.5 V Generic interface (X1): 3.3 V ± 5% RS-232: requires 5 V external power supply ES1/PS2 classified power source according to IEC 62368-1, short-circuit current < 1 A
CURRENT CONSUMPTION	RF field on: 140 mA typically
TEMPERATURE RANGE	Operating: -25 °C up to +80 °C (-13 °F up to +176 °F) Storage: -40 °C up to +85 °C (-40 °F up to +185 °F)
RELATIVE HUMIDITY	5% to 95% non-condensing
READ/WRITE DISTANCE	LF and HF: up to 100 mm / 4 inch, depending on environment and transponder
OPERATING MODES (USB)	USB keyboard emulation – USB virtual COM port – CCID / PC/SC 2.01
MTBF	500,000 hours
WEIGHT	Approx. 10 g / 0.35 oz (without cable)
SUPPORTED OPTIONS AND TRANSPONDERS	Depending on the firmware version and installed options, ELATEC readers and modules can support a wide range of RFID technologies. Please refer to the relevant ELATEC transponder matrix (available at elatec-rfid.com/int/transponder-technology) for more information about the available options and RFID technologies supported by the product.
OS SUPPORT	Windows 7 (32-/64-bit) and higher versions, Linux, Android[1)], iOS[1)], MAC OS X[1)]
PERIPHERAL INTERFACES	USB, RS-232, TTL serial (logic level 3.3 V, CMOS, 5 V tolerant)[1)], I²C[1)], 4 GPIOs[1)], Clock/Data[1)], Wiegand D0/D1[1)], 2 SAM slots for ID-000 card format
TRANSMISSION SPEED	Host: USB full speed (12 Mbit/s), RS-232: up to 115,200 baud, HF Air: up to 848 kbit/s
CERTIFICATION NAME	TWN4 MultiTech 2 LEGIC M LF HF
CERTIFICATIONS	Non-exhaustive list[2)]: CE/RED, FCC, IC, TAA compliant
ORDER CODES	**Modules with LEGIC SM-4200** T4BO-B6 — Standard reader module T4BO-B6-P — Reader module with P option T4BO-B6-PI — Reader module with PI options **Modules with LEGIC SM-4500** T4BO-B6-5 — Standard reader module T4BO-B6-5P — Reader module with P option

[1)]On request

[2)]The product has been certified for use in many countries and regions. Contact your Sales representative for detailed information about all certifications and approvals granted to the product.

ACCESSORIES

CABLES AND POWER SUPPLIES	ELATEC RFID readers and modules can be delivered with additional cables or external power supplies. Refer to the data sheet *Cables for ELATEC devices* for detailed information.

TECHNICAL DRAWINGS

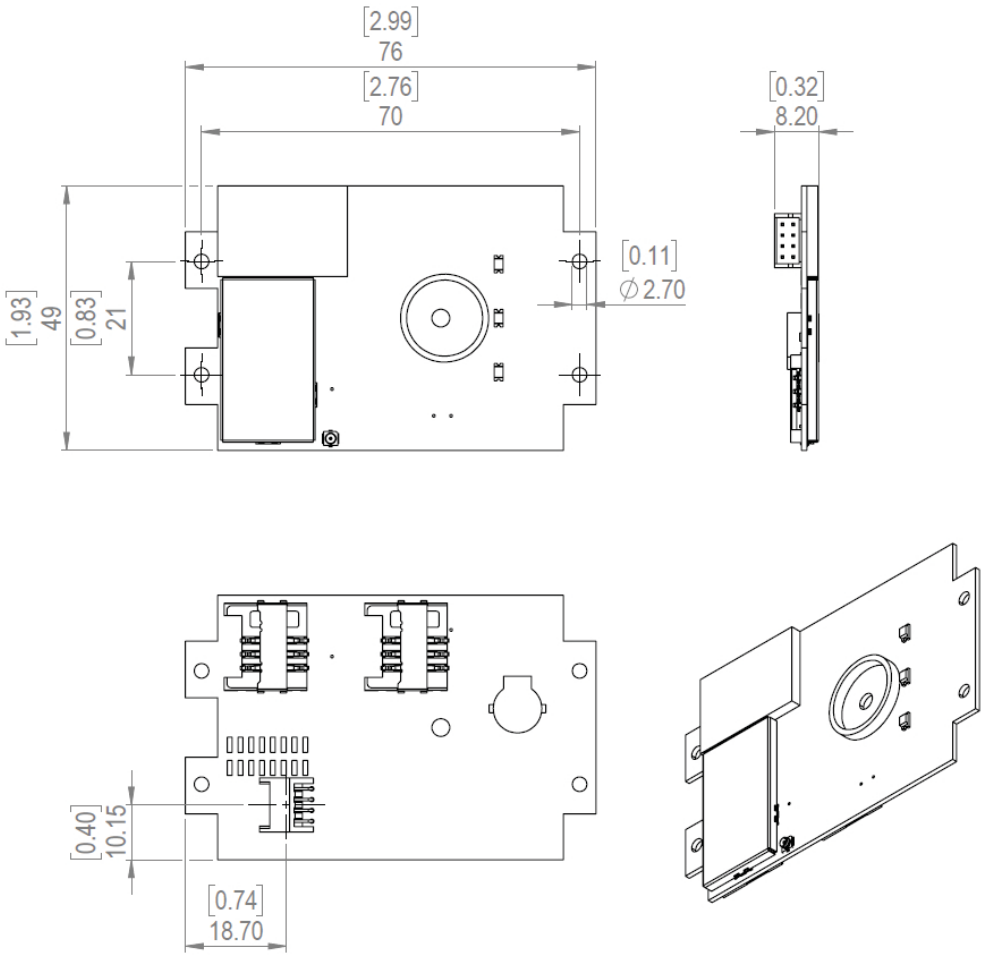

All measures in mm [inch]

ELATEC
RFID Systems

ALLEGION
An Allegion Brand

HQ / EUROPE
ELATEC GmbH
Zeppelinstraße 1
82178 Puchheim, Germany
P +49 89 552 9961 0
F +49 89 552 9961 129
info.elatec@allegion.com

AMERICAS
ELATEC Inc.
1995 SW Martin Hwy.
Palm City, FL 34990, USA
P +1 772 210 2263
F +1 772 382 3749
info.elatecus@allegion.com

APAC
ELATEC Singapore
1 Scotts Road #21-10 Shaw Centre, Singapore 228208
P +65 9670 4348
apac.info.elatec@allegion.com

MIDDLE EAST
ELATEC Middle East Trading FZE
P.O. Box 16868, Dubai, UAE
P +971 50 9322691
info.elatec.ue@allegion.com

elatec.com

ELATEC reserves the right to change any information or data in this document without prior notice. ELATEC declines all responsibility for the use of this product with any other specification but the one mentioned above. Any additional requirement for a specific customer application has to be validated by the customer themselves at their own responsibility. Where application information is given, it is only advisory and does not form part of the specification. Disclaimer: All names used in this document are registered trademarks of their respective owners.